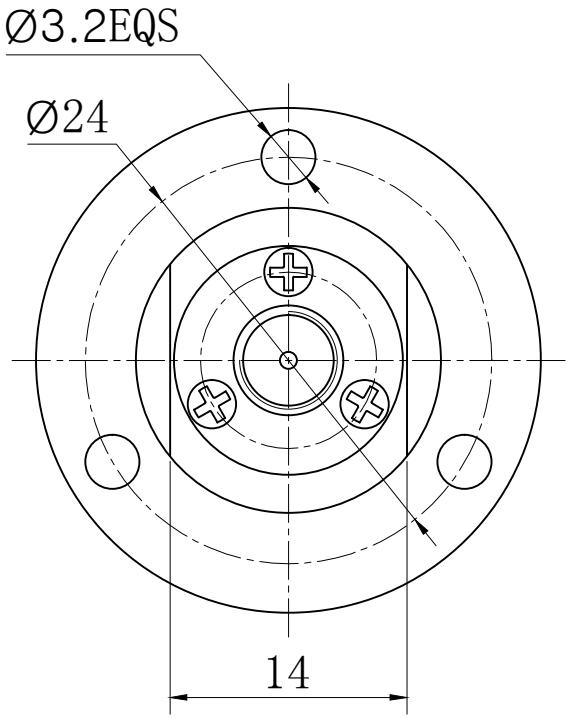
Ø3.2EQS
Ø24
14

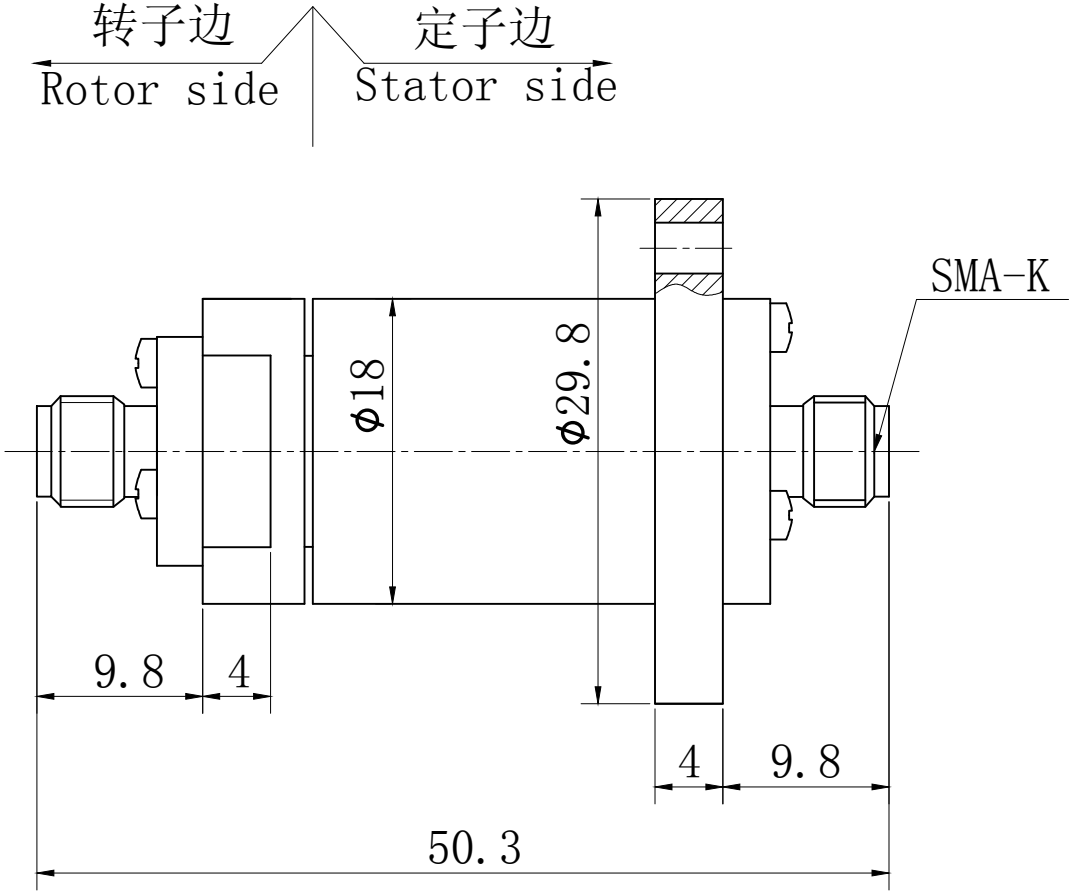
转子边
Rotor side
定子边
Stator side
SMA-K
ϕ18
ϕ29.8
9.8
4
4
9.8
50.3